Data Sheet

Article number: 203380M20125B1T
Description: E+G levelling foot
GN 33-80-M20-125-B1-T, Stainless steel
Note: T Without nut, Wrench flat at the bottom

Measures

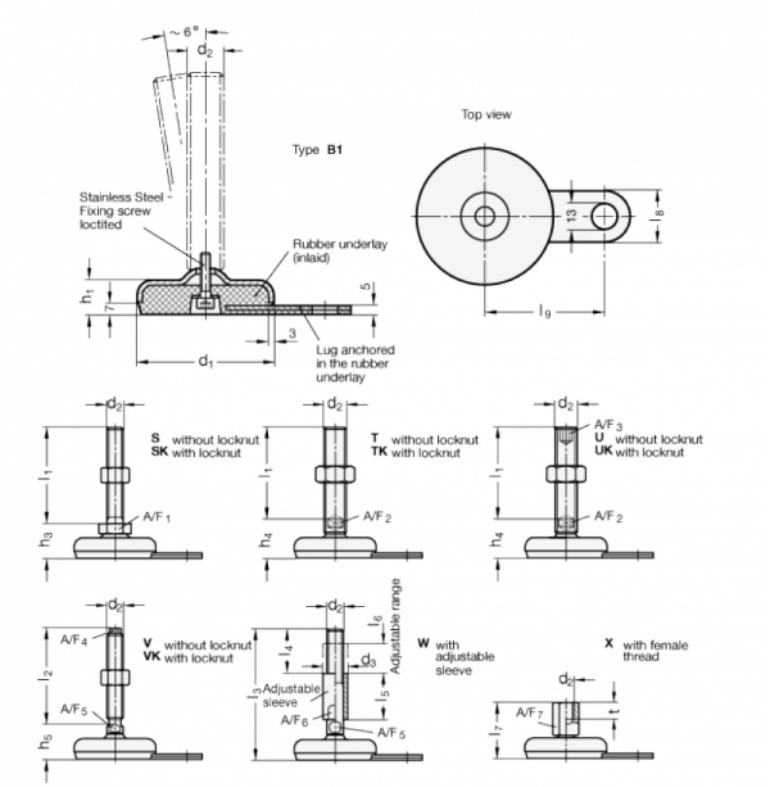

A/F2 = 15
d1 = 80
d2 = M20
h1 = 20
h4 = 35
l1 = 125
l8 = 30
l9 = 70

Product drawings and brochures of any kind may contain errors for which Brd. Klee A/S cannot be liable.